US009124363B2

(12) **United States Patent**
Geyer et al.

(10) **Patent No.: US 9,124,363 B2**
(45) **Date of Patent: Sep. 1, 2015**

(54) **DIGITAL FREQUENCY OFFSET MONITOR FOR COHERENTLY DETECTED OPTICAL SUPERCHANNELS**

(75) Inventors: **Jonas Geyer**, Seukendorf (DE); **Thomas Duthel**, Nuremberg (DE)

(73) Assignee: **Cisco Technology, Inc.**, San Jose, CA (US)

(*) Notice: Subject to any disclaimer, the term of this patent is extended or adjusted under 35 U.S.C. 154(b) by 449 days.

(21) Appl. No.: **13/487,346**

(22) Filed: **Jun. 4, 2012**

(65) **Prior Publication Data**

US 2013/0322877 A1 Dec. 5, 2013

(51) **Int. Cl.**
H04B 17/00 (2015.01)
H04B 10/079 (2013.01)

(52) **U.S. Cl.**
CPC ***H04B 10/07957*** (2013.01)

(58) **Field of Classification Search**
CPC H04B 10/07957
See application file for complete search history.

(56) **References Cited**

U.S. PATENT DOCUMENTS

5,949,562	A *	9/1999	Kubota et al.	398/79
6,246,965	B1 *	6/2001	Cockerham et al.	702/85
6,392,769	B1 *	5/2002	Ford et al.	398/9
6,839,366	B1	1/2005	Houle	
7,039,319	B1	5/2006	Moulton et al.	
7,587,139	B1	9/2009	Bonnedal et al.	
7,693,419	B1 *	4/2010	Chen et al.	398/25
8,111,988	B1 *	2/2012	Schantz et al.	398/34
2002/0005948	A1 *	1/2002	Ishihara	356/300
2004/0165886	A1 *	8/2004	Barwicz et al.	398/33
2005/0089330	A1 *	4/2005	Grot et al.	398/139
2007/0264010	A1 *	11/2007	Bartolini	398/9
2007/0297468	A1 *	12/2007	Stewart et al.	372/33
2008/0131126	A1	6/2008	Gerstel et al.	
2009/0232493	A1 *	9/2009	Tu	398/17
2009/0247101	A1 *	10/2009	Zhang et al.	455/182.3
2010/0082291	A1 *	4/2010	Wen et al.	702/180
2011/0150477	A1 *	6/2011	Winzer	398/65
2011/0150503	A1 *	6/2011	Winzer	398/202
2011/0194043	A1 *	8/2011	Barbarossa	349/41
2012/0070146	A1 *	3/2012	Hinderthuer	398/13
2012/0170937	A1 *	7/2012	Van Leeuwen	398/76
2013/0004154	A1 *	1/2013	Schriefer	398/9
2013/0279912	A1 *	10/2013	Lyubomirsky et al.	398/65
2013/0322877	A1 *	12/2013	Geyer et al.	398/38

* cited by examiner

Primary Examiner — Ken Vanderpuye
Assistant Examiner — Amritbir Sandhu
(74) *Attorney, Agent, or Firm* — Edell, Shapiro & Finnan, LLC

(57) **ABSTRACT**

Techniques are provided to estimate a distance of one received optical subchannel to one or both of its neighbor (adjacent) subchannels. An optical field comprised of a plurality of subchannels of optical signals at respective wavelengths is received on an optical fiber. Using coherent optical reception in conjunction with analog-to-digital conversion, the received optical field is converted to digital complex valued data. The digital complex valued data is transformed to the frequency domain to produce spectrum data. Using either a peak method or a gap method, a distance or spacing is computed between a subchannel of interest among the plurality of subchannels and at least one neighbor subchannel based on the spectrum data.

31 Claims, 6 Drawing Sheets

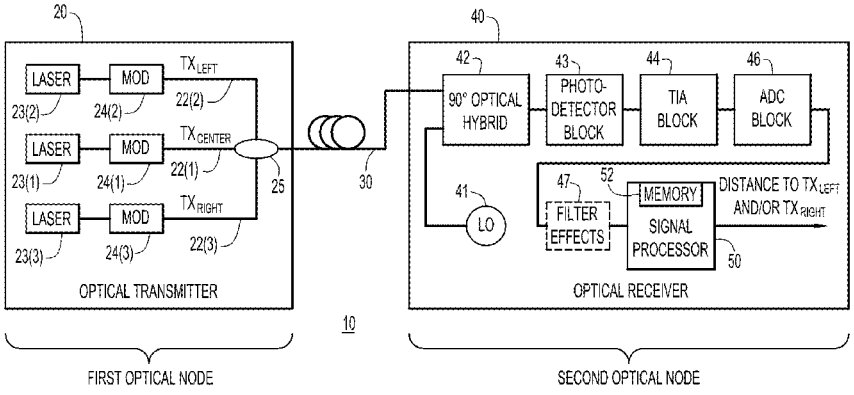

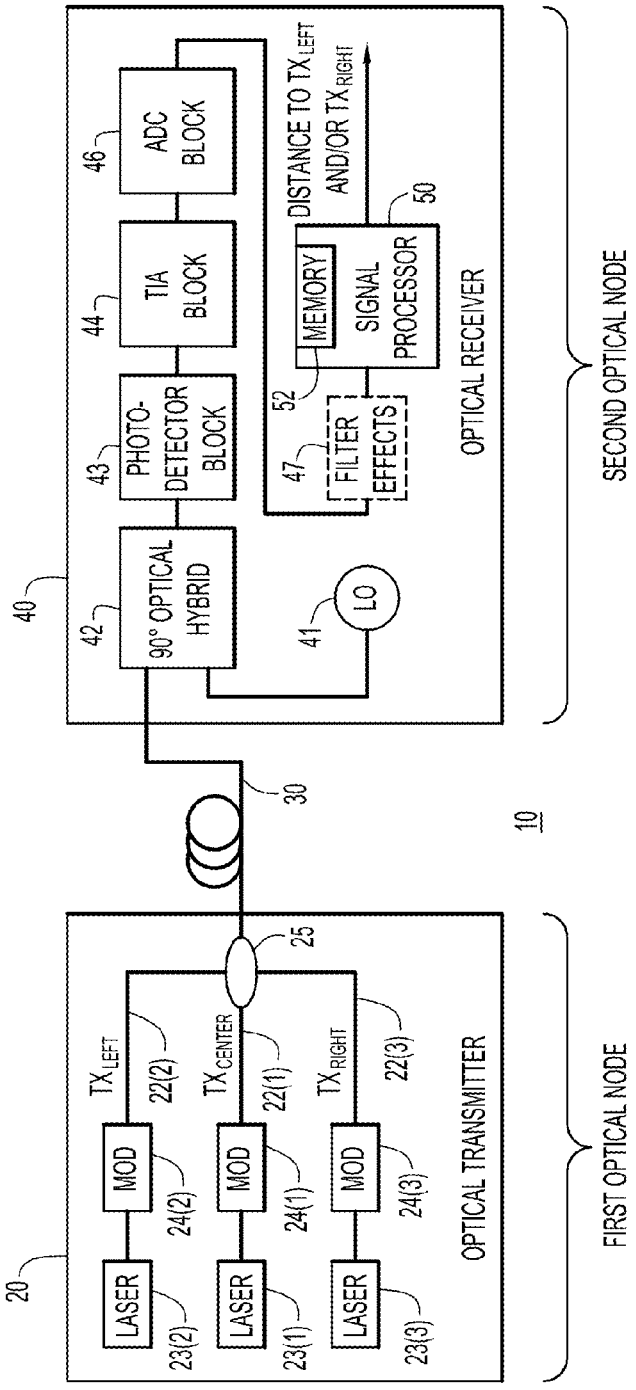
20
LASER
23(2)
MOD
24(2)
TX LEFT
22(2)
LASER
23(1)
MOD
24(1)
TX CENTER
22(1)
LASER
23(3)
MOD
24(3)
TX RIGHT
22(3)
25
OPTICAL TRANSMITTER
FIRST OPTICAL NODE
30
10
40
42
90° OPTICAL HYBRID
41
LO
43
PHOTO-DETECTOR BLOCK
44
TIA BLOCK
46
ADC BLOCK
47
FILTER EFFECTS
52
MEMORY
SIGNAL PROCESSOR
50
DISTANCE TO TX LEFT AND/OR TX RIGHT
OPTICAL RECEIVER
SECOND OPTICAL NODE

FIG.1

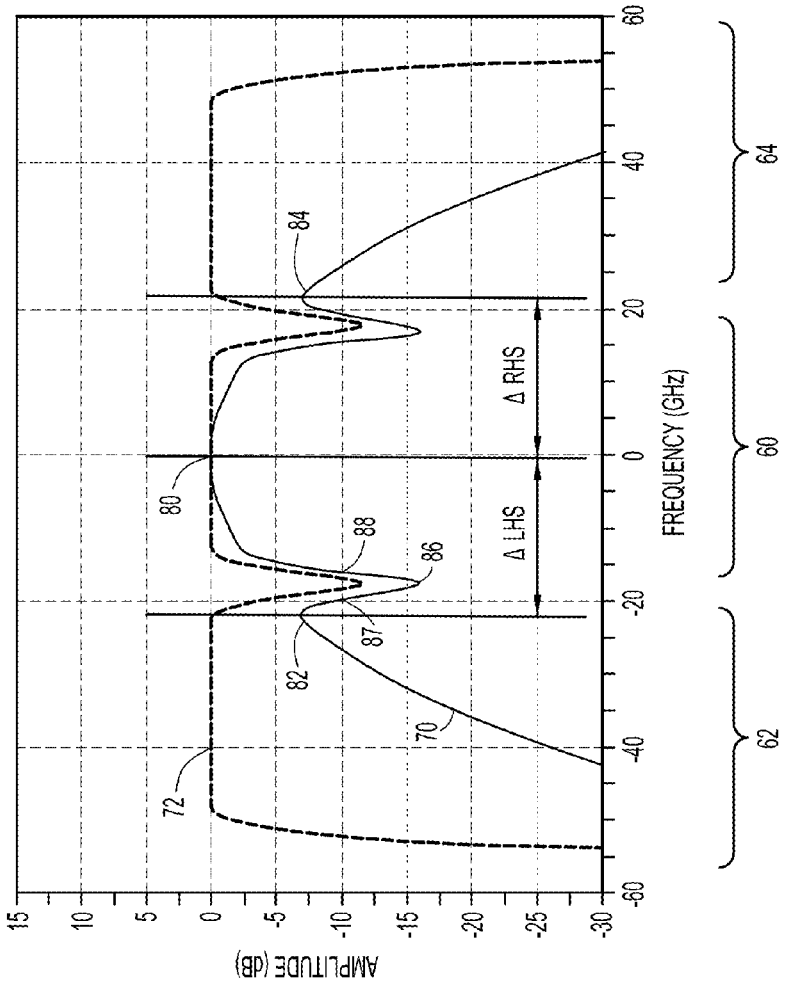
AMPLITUDE (dB)
15
10
5
0
-5
-10
-15
-20
-25
-30
FREQUENCY (GHz)
-60
-40
-20
0
20
40
60
Δ RHS
Δ LHS
72
70
82
87
86
88
80
84
62
60
64

FIG.2

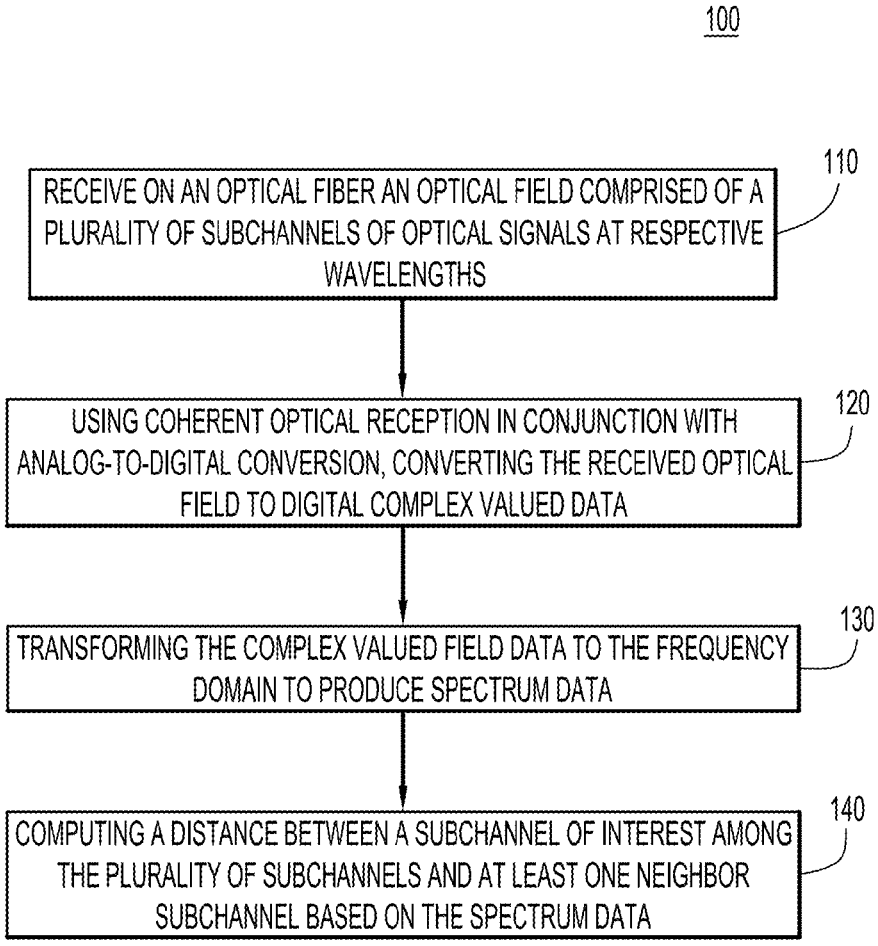
100
RECEIVE ON AN OPTICAL FIBER AN OPTICAL FIELD COMPRISED OF A PLURALITY OF SUBCHANNELS OF OPTICAL SIGNALS AT RESPECTIVE WAVELENGTHS
110
USING COHERENT OPTICAL RECEPTION IN CONJUNCTION WITH ANALOG-TO-DIGITAL CONVERSION, CONVERTING THE RECEIVED OPTICAL FIELD TO DIGITAL COMPLEX VALUED DATA
120
TRANSFORMING THE COMPLEX VALUED FIELD DATA TO THE FREQUENCY DOMAIN TO PRODUCE SPECTRUM DATA
130
COMPUTING A DISTANCE BETWEEN A SUBCHANNEL OF INTEREST AMONG THE PLURALITY OF SUBCHANNELS AND AT LEAST ONE NEIGHBOR SUBCHANNEL BASED ON THE SPECTRUM DATA
140

FIG.3

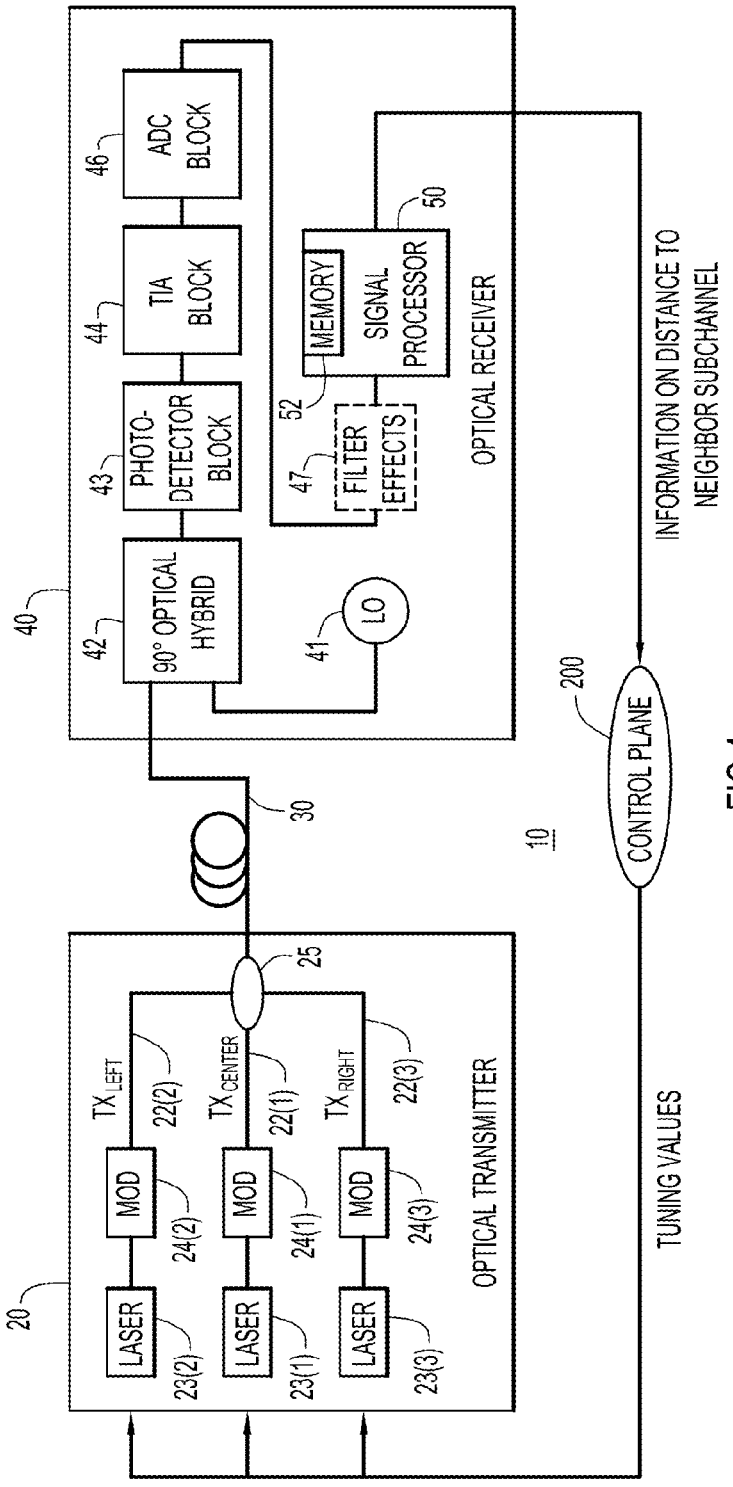
OPTICAL TRANSMITTER
OPTICAL RECEIVER
LASER
MOD
TX LEFT
TX CENTER
TX RIGHT
22(2)
22(1)
22(3)
23(2)
23(1)
23(3)
24(2)
24(1)
24(3)
25
30
40
42
90° OPTICAL HYBRID
43
PHOTO-DETECTOR BLOCK
44
TIA BLOCK
46
ADC BLOCK
41
LO
47
FILTER EFFECTS
52
MEMORY
50
SIGNAL PROCESSOR
20
10
200
CONTROL PLANE
INFORMATION ON DISTANCE TO NEIGHBOR SUBCHANNEL
TUNING VALUES

FIG.4

FIG.5

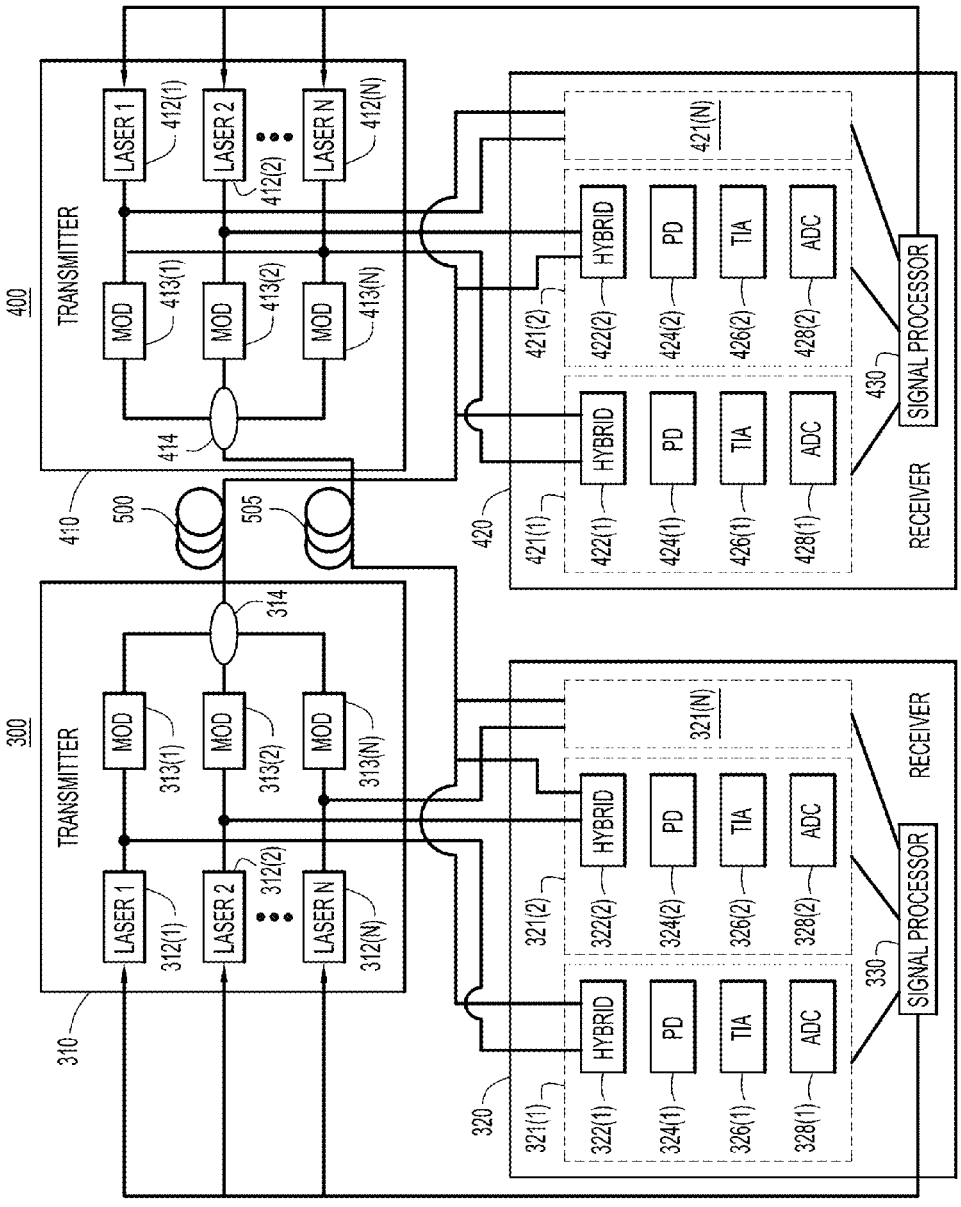
400
TRANSMITTER
LASER 1
LASER 2
LASER N
412(1)
412(2)
412(N)
MOD
413(1)
413(2)
413(N)
414
410
500
505
420
421(1)
421(2)
421(N)
HYBRID
PD
TIA
ADC
422(1)
422(2)
424(1)
424(2)
426(1)
426(2)
428(1)
428(2)
430
SIGNAL PROCESSOR
RECEIVER
300
TRANSMITTER
LASER 1
LASER 2
LASER N
312(1)
312(2)
312(N)
MOD
313(1)
313(2)
313(N)
314
310
320
321(1)
321(2)
321(N)
HYBRID
PD
TIA
ADC
322(1)
322(2)
324(1)
324(2)
326(1)
326(2)
328(1)
328(2)
330
SIGNAL PROCESSOR
RECEIVER

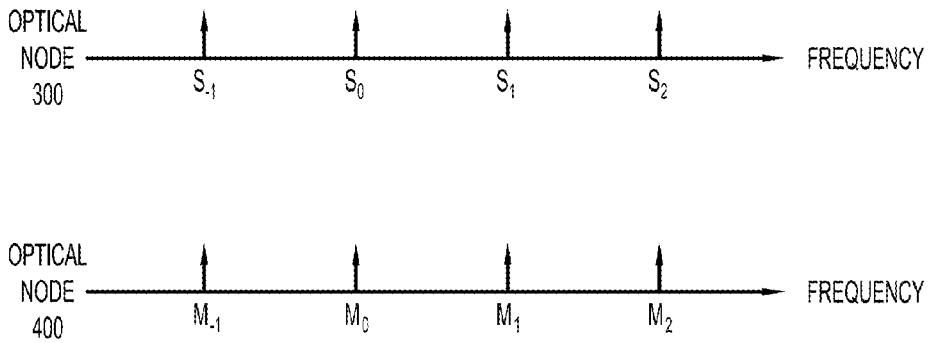
OPTICAL
NODE
300
S_{-1}
S_0
S_1
S_2
FREQUENCY
OPTICAL
NODE
400
M_{-1}
M_0
M_1
M_2
FREQUENCY

FIG.6

DIGITAL FREQUENCY OFFSET MONITOR FOR COHERENTLY DETECTED OPTICAL SUPERCHANNELS

TECHNICAL FIELD

The present disclosure relates to optical communication systems and devices.

BACKGROUND

In optical communication networks, optical superchannels are used to transmit multiple optical signal streams on several subchannels (wavelength subchannels) which are closely spaced to each other. To make best use of the available bandwidth the exact frequency spacing of the subchannels needs to be actively controlled. In this scenario, the optical transmitter uses Nyquist pulse shaping to allow for dense channel spacing.

In a coherent optical network, the optical signals on each wavelength are amplitude and phase modulated and polarization multiplexing is used to further increase throughput. A receiver uses coherent optical reception in conjunction with analog-to-digital conversion to linearly translate the received optical field to electrical signals. The electrical signals are then converted to digital signals and further processed using digital signal processing algorithms. The optical receiver is capable of receiving several (e.g., ten) neighboring channels without having to use an optical channel selection filter.

BRIEF DESCRIPTION OF THE DRAWINGS

FIG. **1** is a block diagram of an optical communication system in which an optical receiver is configured to determine spacings between adjacent received optical subchannels according to the techniques described herein.

FIG. **2** is a diagram illustrating plots of spectrum data associated with received optical subchannels and showing the spectrum data that is used to determine the spacings between adjacent subchannels.

FIG. **3** is an example of a flow chart depicting operations performed to compute spacings between adjacent received optical subchannels according to the techniques described herein.

FIG. **4** is an example of a system block diagram showing how an optical receiver at one node may transmit information indicating the subchannel spacing to a control plane for controlling the tuning of a laser of an optical transmitter at another node.

FIG. **5** is an example of another system block diagram that shows how the subchannel spacing information can be inherently communicated between nodes that employ a single laser autonomic system architecture for each optical subchannel.

FIG. **6** is a diagram illustrating the subchannel assignments and a technique employed in the system of FIG. **5** to communicate subchannel spacing.

DESCRIPTION OF EXAMPLE EMBODIMENTS

Overview

Techniques are provided herein to estimate a distance of one received optical subchannel to one or both of its neighbor (adjacent) subchannels. An optical field comprised of a plurality of subchannels of optical signals at respective wavelengths is received on an optical fiber. Using coherent optical reception in conjunction with analog-to-digital conversion, the received optical field is converted to digital complex valued data. The digital complex valued data is transformed to the frequency domain to produce spectrum data. A distance or spacing is computed between a subchannel of interest among the plurality of subchannels and at least one neighbor subchannel based on spectrum data. Two methods are disclosed for computing the distance. One method is based on a distance between certain peaks in the spectrum data and another method is based on a measure of a distance (or gap) between points in the spectrum data that are on opposite sides of a minimum point.

Example Embodiments

Referring first to FIG. **1**, a block diagram is shown of an example optical communication system or network **10** comprising an optical transmitter **20** and an optical receiver **40**. The optical transmitter **20** is at a first optical node or device and the optical receiver **40** is at a second optical node or device remote from the first optical node and in communication with the first optical node by way of the optical fiber **30**. The first optical node may also include a receiver similar to optical receiver **40** and the second optical node may also include a transmitter similar to optical transmitter **20**. For simplicity, the optical receiver at the first node and the optical transmitter at the second node are not shown in FIG. **1**.

The optical transmitter **20** comprises a plurality of optical lasers and modulators to transmit multiple wavelengths (subchannels) into optical fiber **30** for dense subchannel spacing of wavelengths. FIG. **1** shows, for example purposes only, three optical subchannels **22**(**1**), **22**(**2**) and **22**(**3**). Subchannel **22**(**1**) is at a wavelength that is in the center or between the wavelengths transmitted by subchannel **22**(**2**) and **22**(**3**). In this example subchannel **22**(**2**) transmits at a wavelength that is to the left of the wavelength transmitted by subchannel **22**(**1**) and subchannel **22**(**3**) transmits at a wavelength that is to the right of the wavelength transmitted by subchannel **22**(**1**). For subchannel **22**(**1**) there is a laser **23**(**1**) and an optical modulator (Mod) **24**(**1**), for subchannel **22**(**2**) there is a laser **23**(**2**) and a Mod **24**(**2**) and for subchannel **22**(**3**) there is a laser **23**(**3**) and a Mod **24**(**3**).

The optical transmitter **20** may use amplitude and phase modulation in conjunction with polarization multiplexing. The optical receiver **40** is capable of receiving several neighboring subchannels without the need to use an optical channel selection filter.

It should be understood that in an actual optical network deployment, more than three wavelengths or subchannels would be transmitted over an optical fiber **30**. Furthermore, though not specifically indicated in FIG. **1**, the optical transmitter uses Nyquist pulse shaping (e.g., raised cosine filter with roll-off close to zero) to allow for very dense packing of optical subchannels in what is called a "superchannel". In addition, polarization multiplexing may be used to even further increase the throughput. For example, for each wavelength or subchannel, there are two optical signals transmitted, on different polarizations.

The optical signals for the subchannels **22**(**1**)-**22**(**3**) are coupled to an optical combiner **25**. The optical combiner **25** combines the optical signals on the three wavelengths (left, center, right) and couples the combined optical signal to the optical fiber **30** for propagation therethrough to the optical receiver **40**.

The optical receiver **40** comprises a local optical oscillator (LO) **41**, a 90° optical hybrid **42**, a photodetector block **43**, a transmit impedance amplifier (TIA) block **44**, an analog-to-digital converter (ADC) block **46** and a signal processor **50**.

The LO **41** is a laser that generates a LO optical signal that is supplied as input to the 90° optical hybrid **42**. The 90° optical hybrid **42** is a multi-port device that comprises linear dividers and combiners interconnected in such a way that different additions of the LO optical signal and the received optical signal(s) are obtained.

The photodetector block **43** comprises a plurality of photodetector units each configured to convert an optical signal to an electrical signal. The output of the photodetector block **43** is a plurality of electrical signals representative of the received polarization-resolved optical field.

The TIA block **44** comprises a plurality of TIAs each configured to amplify an electrical signal. The number of TIAs in the TIA block **44** generally tracks the number of different electrical signals output by the photodetector block **42**. The TIA block **44** outputs a plurality of amplified analog electrical signals.

The ADC block **46** comprises a plurality of ADCs each of which converts the analog electrical signals output by the TIA block **44**, to produce a plurality of digital signals. The digital signals are supplied to the signal processor **50**. The digital signals output by the ADC block **46** comprise digital complex valued field data representing the polarization-resolved optical field at the optical receiver input. Thus, using coherent optical reception in conjunction with analog-to-digital conversion, the received optical field is translated to digital electrical signals. As explained further hereinafter, the signal processor **50** converts the digital complex value field data to frequency domain data by an appropriate transformation operation, e.g., a Fourier transform, to obtain spectrum data.

FIG. **1** shows a filter effects block **47** to indicate or represent that there is an electrical bandwidth limitation in the optical receiver **40** caused by components in the analog receiver chain (e.g., photodetector block **43**, TIA block **44**, ADC block **46**). The filter effects block **47** is not a dedicated filter device or component, but is shown in FIG. **1** for the sake of completeness.

The signal processor **50** may take a variety of different forms, including a digital signal processor, general purpose programmable microprocessor or microcontroller, fixed digital logic device, programmable digital logic device, hybrid or combination of a fixed and programmable digital logic devices, etc. Thus, the signal processor **50** may be embodied by one or more application specific integrated circuits (ASICs) that include onboard memory **52** or work with a separate memory.

The memory **52** may be used to store measurement data and computation data associated with the processes described herein. The memory **52** may also store computer/processor executable instructions that, when executed by a processor, cause the processor to perform operations described herein.

The memory **52** may comprise read only memory (ROM), random access memory (RAM), magnetic disk storage media devices, optical storage media devices, flash memory devices, electrical, optical, or other physical/tangible memory storage devices. Thus, in general, the memory **52** may comprise one or more tangible (non-transitory) computer readable storage media (e.g., a memory device) encoded with software comprising computer executable instructions and when the software is executed (by the processor **50**) it is operable to perform the operations described herein.

Reference is now made to FIG. **2**. FIG. **2** illustrates spectrum associated with a received optical field for three optical subchannels comprising a center subchannel **60**, a neighbor or adjacent subchannel **62** to the left of the center subchannel **60**, and a neighbor or adjacent subchannel **64** to the right of center subchannel **60**. In an actual optical system, there may be additional subchannels (as part of a super-channel) so the use of the terms "center", "left" and "right" are completely arbitrary and relative to a particular subchannel of interest that is between two other subchannels. In this example, subchannel **60** is the particular subchannel of interest.

There are several plots shown in FIG. **2**. The plot **70** in solid line represents the spectrum data output by the ADC block **46** and the plot **72** in dashed line represents the optical spectrum.

According to the techniques described herein, the spacings of the received optical subchannels are determined by analyzing the electrical spectrum data (as depicted by plot **70**). One technique, referred to here as the "peak method" involves using the distance between the center of the received optical subchannel and, for example, a peak caused by a neighbor channel, to compute the (center to center) distance to the neighbor channel. For example, in FIG. **2**, the subchannel **60**, which is between subchannels **62** and **64**, has a peak caused by its spectrum shown at **80**. The peak **80** could be off from the center of the subchannel **60** due to signal to local oscillator frequency offset. This peak **80** represents the center of subchannel **60** when there is no signal-to-local oscillator frequency offset. When there is signal-to-local oscillator frequency offset the center of subchannel **60** could be derived by using information from digital carrier recovery and frequency estimation techniques, which are part of the coherent receiver signal processing chain. Left neighbor subchannel **62** causes a peak at **82** associated with a righthand edge of the subchannel **62**. Likewise, right neighbor subchannel **64** causes a peak at **84** associated with a lefthand edge of subchannel **64**.

The distance Δ_{LHS} is the distance between the center **80** of the subchannel **60** and righthand edge peak **82** of subchannel **62**. Similarly, the distance Δ_{RHS} is the distance between center **80** of the subchannel **64** and the lefthand edge peak **84** of subchannel **64**. It has been determined that the (center to center) distance between subchannel **60** and left neighbor subchannel **62** is related to the distance Δ_{LHS}, and the (center to center) distance between subchannel **60** and right neighbor subchannel **64** is related to the distance Δ_{RHS}. Thus, by analyzing the distance (in Hz) between center **80** and peak **82**, and between center **80** and peak **84**, the (center to center) distance between subchannel **60** and left neighbor subchannel **62**, and the (center to center) distance between the subchannel **60** and right neighbor subchannel **64** may be computed.

The (center to center) distance between the subchannel **60** and the left neighbor subchannel **62** may be computed as Δ_{LHS}+k and the (center to center) distance between the subchannel **60** and the left neighbor subchannel **64** may be computed as Δ_{RHS}+k, where k is a correction term that depends on transmitter and receiver properties, e.g. data rate, spectral shaping (roll-off) at the transmitter, analog bandwidth at the receiver and signal-to-local oscillator frequency offset. The correction term k may be positive or negative. To address these influences k is calculated based on calibration data obtained from, e.g. calibration during manufacturing.

In other words, the distance between the center of the subchannel of interest and the center of the neighbor subchannel is computed by measuring the distance between the center of the subchannel of interest and the peak associated with the edge of the neighbor subchannel and adding to the measured distance a correction term k. This computed distance can then be used to control the wavelength/frequency at the transmitter. For example, a control signal may be computed to control/adjust the amount of frequency/wavelength tuning as $f_{correction}=\Delta f_{target}-(\Delta_{LHS/RHS}+k)$, where $f_{correction}$ is the amount of frequency tuning/adjustment to be made for the laser that generates that subchannel and Δf_{target} is the target or

desired frequency spacing (center to center) between the subchannel of interest and its neighboring subchannel.

Another technique, referred to herein as the "gap method" involves using the width of a gap between adjacent subchannels, e.g., obtained by evaluating the distance between points in the spectrum that are at a certain (predetermined) power level on opposite sides of a minimum point. As shown in FIG. **2**, a minimum point **86** is located in the spectrum data plot **70** between adjacent subchannels, e.g., between subchannel **60** and subchannel **62**. Then, the points on the plot **70** on opposite sides of the minimum point **86** and which are at a predetermined power level, e.g., −10 dB, are located, as shown at **87** and **88**. The measured distance (in GHz) between points **87** and **88** is computed, and is referred to as Gap, and in the case of the lefthand subchannel **62**, referred to as Gap_{LHS} and similarly on the righthand side for subchannel **64** a distance would be computed and referred to as Gap_{RHS}. A calculation similar to that described above for the peak method would be used for the gap method, e.g., the center to center distance between the subchannel **60** and its adjacent subchannels **62** and **64** is computed as $Gap_{LHS/RHS}$+k', wherein this case, k' is a correction term for the gap method that is also determined by means of calibration. In summary, the gap method involves measuring the distance between points in the spectrum data that are on opposite sides of a minimum point and which are at a predetermined power level, and adding to the measured distance ($Gap_{LHS/RHS}$) a correction term (k'), to determine a distance between a center of the subchannel of interest and a center of the neighbor subchannel.

Reference is now made to FIG. **3**, with continued reference to FIGS. **1** and **2**, for a description of operations of a process **100** used to determine the spacing or distance between optical subchannels. These operations are performed at an optical receiver, e.g., optical receiver **50** shown in FIG. **1**. At **110**, an optical field comprised of a plurality of subchannels of optical signals at respective wavelengths is received on an optical fiber at an optical receiver. At **120**, using coherent optical reception in conjunction with analog-to-digital conversion, the received optical field is converted to digital complex valued data. For example, the 90° optical hybrid **42** mixes the received optical field with an optical signal from the LO laser to down-mix the received optical field, which is then converted to electrical signals by the photodetector block **43**, amplified by the TIA block **44** and converted to digital complex valued data by the ADC block **46**. At **130**, the complex valued field data is transformed to the frequency domain to produce spectrum data. The operation **130** may be performed by the signal processor **50** or it may be performed by a separate component. At **140**, a distance between a subchannel of interest among the plurality of subchannels and at least one neighbor subchannel is computed based on the spectrum data using either the peak method or the gap method (or by both methods and an average of the two methods is used), both of which are described above in connection with FIG. **2**. Using the distance computed by the peak method or gap method, an amount of tuning or adjustment for the subchannel of interest can be determined based on a target distance/spacing minus the determined center to center distance between the subchannel of interest and its neighbor subchannel. These techniques can be applied to compute a distance between any given subchannel of interest and each of its neighbor subchannels on opposite sides of the subchannel of interest.

Thus, in summary, FIG. **2** depicts a method that involves receiving on an optical fiber an optical field comprised of a plurality of subchannels of optical signals at respective wavelengths; using a local optical oscillator, converting the received optical field to digital complex valued data; transforming the digital complex valued data to the frequency domain to produce spectrum data; and computing a distance between a subchannel of interest among the plurality of subchannels and at least one neighbor subchannel based on the spectrum data.

Similarly, FIG. **1** depicts an apparatus comprising an optical hybrid unit configured to receive on an optical fiber an optical field comprised of a plurality of subchannels of optical signals at respective wavelengths and to mix the received optical field with a local oscillator optical signal; a photodetector unit coupled to the optical hybrid unit and configured to receive as input a mixed optical field and to convert the mixed optical field to electrical signals; an analog-to-digital converter unit configured to convert the electrical signals to digital complex value data; and a signal processor coupled to the analog-to-digital filter. The signal processor is configured to transform the complex valued data to the frequency to produce spectrum data, and to compute a distance between a subchannel of interest among the plurality of subchannels and at least one neighbor subchannel based on the spectrum data.

In still another form, a software-based implementation of these techniques may be provided, and which is embodied in one or more computer readable storage media encoded with software comprising computer executable instructions and when the software is executed operable to: transform digital complex valued data derived from a received optical field comprising a plurality of subchannels of optical signals at respect wavelengths, to the frequency domain to produce spectrum data; and compute a distance between a subchannel of interest among the plurality of subchannels and at least one neighbor subchannel based on the spectrum data.

There are many ways in which the frequency/wavelength for a subchannel may be reported back to the optical transmitter. A message may be sent to the optical transmitter, where the message includes information about the distance between the subchannel of interest and at least one neighbor subchannel. FIG. **4** illustrates one configuration in which information about the distance/spacing is relayed by way of a control plane to the optical transmitter.

Referring now to FIG. **4**, an example configuration is shown in which the subchannel distance/spacing information computed, as described above, is sent back to the optical transmitter and used to control wavelength/frequency of individual subchannels. In the configuration of FIG. **4**, the distance to a left and a right neighbor subchannel for a given subchannel of interest is reported to a control plane **200**. The control plane **200** will generate tuning/correction values to the appropriate laser(s) in the optical transmitter, if adjustment is needed. The control plane **200** may consist of one or more remote server computers that are coupled to each of the optical nodes for control purposes. In another form, the signal processor **50** in the optical receiver **40** will compute the tuning/correction values, send them to the control plane **200**, and the control plane **200** sends the tuning/correction values computed by the optical receiver to the optical transmitter.

Reference is now made to FIGS. **5** and **6** for another way of conveying information about the spacing between adjacent subchannels across an optical network. FIG. **5** shows two optical nodes **300** and **400** each coupled to optical fibers **500** and **505**. Optical fiber **500** carriers optical signals in the "west-east" direction (from left to right) from optical node **300** to optical node **400**, and optical fiber **505** carriers optical signals in the "east-west" direction (from right to left) from optical node **400** to optical node **300**. Each optical node is configured to operate in a single-laser-autonomic mode by which the same laser for a given wavelength is used for both transmission and as a local oscillator for coherent reception.

For example, optical node **300** comprises an optical transmitter section **310** that comprises a plurality of lasers **312**(**1**)-**312**(N), a corresponding plurality of optical modulators (Mod) **313**(**1**)-**313**(N) and an optical combiner **314**. The optical combiner **314** is coupled to optical fiber **500** so that optical signals are transmitted from optical node **300** over optical fiber **500** to optical node **400**. Similarly, the optical node **400** comprises an optical transmitter section **410** that comprises a plurality of lasers **412**(**1**)-**412**(N), a corresponding optical modulator (Mod) **413**(**1**)-**413**(N) and an optical combiner **414**. The optical combiner **414** is coupled to optical fiber **505** so that optical signals are transmitted from optical node **400** over optical fiber **505** to optical node **300**.

The optical node **300** comprises an optical receiver **320** that comprises a plurality of receiver chains **321**(**1**)-**321**(N). Each receiver chain comprises a 90° optical hybrid, a photodetector (PD) block, a TIA block, and an ADC block. For example, receiver chain **321**(**1**) comprises hybrid **322**(**1**), PD block **324**(**1**), TIA block **326**(**1**) and ADC block **328**(**1**). Receiver chain **322**(**2**) comprises hybrid **322**(**2**), PD block **324**(**2**), TIA block **326**(**2**) and ADC block **328**(**2**). Each of the hybrids **322**(**1**)-**322**(N) are coupled to the optical fiber **505** to receive signals transmitted from optical node **400**. The outputs from all of the receiver chains **321**(**1**)-**321**(N) are coupled to the signal processor **330**. The blocks inside receiver chain **321**(N) are not shown for simplicity. In another form, each of the receiver chains **321**(**1**)-**321**(N) has its own signal processor.

Likewise, the optical node **400** comprises an optical receiver **420** that comprises a plurality of receiver chains **421**(**1**)-**421**(N). Receiver chain **421**(**1**) comprises a hybrid **422**(**1**), a PD block **424**(**1**), a TIA block **426**(**1**), and an ADC block **428**(**1**). Receiver chain **421**(**2**) comprises hybrid **422**(**2**), a PD block **424**(**2**), a TIA block **426**(**2**), and an ADC block **428**(**2**). The components inside receiver chain **421**(N) are not shown for simplicity. Each of the hybrids **422**(**1**)-**422**(N) are coupled to the optical fiber **50** to receive signals transmitted from optical node **300**. The outputs from each of the receiver chains **421**(**1**)-**421**(N) are coupled to a signal processor **430**. Alternatively, each receiver chain **421**(**1**)-**421**(N) has its own signal processor.

In optical node **300**, in addition to being coupled to a corresponding optical modulator in the transmitter **310**, the output of each of the lasers **312**(**1**)-**312**(N) is coupled to the to the hybrid in a corresponding one of the receiver chains **321**(**1**)-**321**(N) as shown in FIG. **5**. In optical node **400**, in addition to being coupled to a corresponding optical modulator in the transmitter **410**, the output of each of the lasers **412**(**1**)-**412**(N) is coupled to the hybrid in a corresponding one of the receiver chains **421**(**1**)-**421**(N). In this way, the lasers in each optical node are used both for transmission and as a local oscillator for reception. The signal processor **330** in optical node **300** controls the frequency/wavelength of the lasers **312**(**1**)-**312**(N) and the signal processor **430** in optical node **400** controls the frequency/wavelength of the lasers **412**(**1**)-**412**(N). In the configuration of FIG. **5**, each laser is used for transmitting on a wavelength and for recovering an optical signal received on approximately the same wavelength (intradyne).

As shown in FIG. **6**, one of the optical nodes is deemed to transmit on master (M) subchannels and the other optical node to transmit on slave (S) channels. For example, optical node **400** is deemed to transmit on master subchannels and optical node **300** to transmit on slave subchannels. In this master-slave configuration, the optical node **300**, as the slave, locks the wavelengths of its subchannels to the wavelengths transmitted by the optical node **400**. Thus the optical node **400**, as the master, determines the spacing of the wavelengths transmitted by the optical node **300**, the slave. In the example of FIG. **6**, there are four subchannels. Since subchannel M_0 is defined as the center of a superchannel the optical node **400** just changes the frequency/wavelength of subchannel M_0 when the superchannel is to be moved, but not for other purposes. Each receiver chain in the optical nodes can detect spectral components from its adjacent/neighbor subchannels. At optical node **300**, the frequency/wavelength of each of its slave subchannels is adjusted so that each is centered on its corresponding received subchannel. In other words, for the subchannels transmitted by the optical node **300**, the optical node **300** copies the subchannel alignment of the master subchannels based on the frequency/wavelength of each master subchannel. Then, the signal processor **430** in optical node **400** adjusts the frequency of the laser for subchannel M_1 to be the correct distance to/spacing from subchannel M_0, and similarly adjusts the frequency of the laser for subchannel M_2 to be the correct distance to/spacing from subchannel M_1 and M_{-1} to be the correct distance to/spacing from subchannel M_0, where spacings between receive subchannels are computed using the techniques described herein in connection with FIGS. **2**-**4**. The wavelength of subchannel S_{-1} equals the wavelength of subchannel M_{-1}, the wavelength of subchannel S_0 equals the wavelength of subchannel M_0, and so on. When the optical node **400** transmits to the optical node **300** on the frequencies/wavelengths for subchannels M_{-1}, M_0, M_1, and M_2, the optical node **300** receives on these wavelengths and uses those wavelengths for transmitting back on its subchannels at wavelengths S_{-1}, S_0, S_1, and S_2 to the optical node **400**. In the configuration in which each receiver chain in an optical node has its own processor (instead of one processor shared by all of the receiver chains), the processor of one subchannel, e.g., subchannel M_0, can control its own distance to the direct neighbors. In the configuration in which a single processor is shared among all receiver chains in an optical node, then that processor will have information about every subchannel in the superchannel to facilitate the aforementioned operations.

The optical node **400** performs the operations depicted in FIG. **3** (receiving, converting, transforming and computing) based on an optical field of subchannels transmitted by the optical node **300**, and the signal processor in the optical node **400** adjusts a wavelength of a laser at the optical node **400** based on the distance relative to a particular one of the plurality of subchannels, e.g., subchannel M_0. The optical node **300** receives optical signals from the optical node **400**, including the optical signal for the subchannel for which the laser was adjusted at the optical node **400**. The optical node **300** determines the wavelength/frequency for that subchannel, and copies that wavelength/frequency by adjusting the laser for that subchannel (slave subchannel) used at the optical node **300** to transmit to the optical node **400** based on the wavelength determined for the optical signal at the optical node **300**. Thus, the optical node **400** can have "master" control of the wavelengths/frequencies that are used between it and optical node **300** without having to use a control plane mechanism.

FIG. **5**, when viewed in conjunction with FIG. **6**, represents a system comprising a first node and a second node each coupled to two optical fibers to send and receive optical signals in a plurality of subchannels at respective wavelengths over the optical fibers to each other. Each of the first and second nodes is configured, with respect to the plurality of subchannels of optical signals received from the other node, to: convert a received optical field containing the plurality of subchannels to digital complex valued data; transform the digital complex valued data to the frequency domain to pro-

duce spectrum data; and compute a distance between a subchannel of interest among the plurality of subchannels and at least one neighbor subchannel based on the spectrum data. The second node is further configured to determine a wavelength of one of the plurality of subchannels received from the first node and adjust a laser at the second node used to transmit to the first node based on the wavelength determined for the subchannel at the second node. Each node may determine the spacings between received optical subchannels using either or both of the gap and peak methods described herein.

The above description is intended by way of example only.

What is claimed is:

1. A method comprising:

receiving on an optical fiber an optical field comprised of a plurality of subchannels of optical signals at respective wavelengths;

using coherent optical reception in conjunction with analog-to-digital conversion, converting the received optical field to digital complex valued data;

transforming the digital complex valued data to the frequency domain to produce electrical spectrum data; and

computing a distance between a subchannel of interest among the plurality of subchannels and at least one neighbor subchannel based on the electrical spectrum data,

wherein the computing comprises measuring a distance between points in the electrical spectrum data that are on opposite sides of a minimum point and which are at a predetermined power level, and adding a correction term to the measured distance to determine a distance between a center of the subchannel of interest and a center of the neighbor subchannel.

2. The method of claim **1**, wherein computing includes determining a distance between a center of the subchannel of interest and a peak associated with an edge of the neighbor subchannel.

3. The method of claim **1**, wherein computing includes measuring the distance between the center of the subchannel of interest and the peak associated with the edge of the neighbor subchannel and adding a correction term to determine the distance between the center of the subchannel of interest and a center of the neighbor subchannel.

4. The method of claim **1**, and further comprising determining an amount of tuning for the subchannel of interest based on a target spacing between the subchannel of interest and the neighbor subchannel minus a distance between a center of the subchannel of interest and a center of the neighbor subchannel.

5. The method of claim **1**, wherein computing includes computing a distance between the subchannel of interest and each of its neighbor subchannels on opposite sides of the subchannel of interest.

6. The method of claim **1**, further comprising sending to an optical transmitter that transmits the plurality of subchannels of optical signals a message that includes information about the distance between the subchannel of interest and the at least one neighbor subchannel.

7. The method of claim **1**, further comprising sending a message that includes information about the distance between the subchannel of interest and at least one neighbor subchannel to a control plane that generates tuning values, if needed, and sends the tuning values to an optical transmitter that transmits the plurality of subchannels of optical signals.

8. The method of claim **1**, wherein receiving, converting, transforming and computing are performed at a first node coupled to the optical fiber based on the optical field transmitted by a second node that is coupled to the optical fiber, and further comprising adjusting a wavelength of a laser at the first node based on the distance relative to a particular one of the plurality of subchannels.

9. The method of claim **8**, further comprising at the second node, determining a wavelength of one of the plurality of subchannels received from the first node, and adjusting a laser at the second node used to transmit to the first node based on the wavelength determined for the subchannel at the second node.

10. The method of claim **1**, wherein computing is performed for each of the plurality of subchannels.

11. An apparatus comprising:

an optical hybrid unit configured to receive on an optical fiber an optical field comprised of a plurality of subchannels of optical signals at respective wavelengths and to mix the received optical field with a local oscillator optical signal;

a photodetector unit coupled to the optical hybrid unit and configured to receive as input the optical field and to convert the optical field to electrical signals; and

an analog-to-digital converter unit configured to convert the electrical signals to digital complex valued data;

a signal processor coupled to the analog-to-digital filter and configured to:

transform the complex valued data to the frequency to produce electrical spectrum data; and

compute a distance between a subchannel of interest among the plurality of subchannels and at least one neighbor subchannel based on the electrical spectrum data by measuring a distance between points in the electrical spectrum data that are on opposite sides of a minimum point and which are at a predetermined power level, and adding a correction term to the measured distance to determine a distance between a center of the subchannel of interest and a center of the neighbor subchannel.

12. The apparatus of claim **11**, wherein the signal processor is configured to determine a distance between a center of the subchannel of interest and a peak associated with an edge of the neighbor subchannel.

13. The apparatus of claim **12**, wherein the signal processor is configured to measure the distance between the center of the subchannel of interest and the peak associated with the edge of the neighbor subchannel and add a correction term to the measured distance to determine the distance between the center of the subchannel of interest and the center of the neighbor subchannel.

14. The apparatus of claim **11**, wherein the signal processor is further configured to determine an amount of tuning for the subchannel of interest based on a target spacing between the subchannel of interest and the neighbor subchannel minus a distance between a center of the subchannel of interest and a center of the neighbor subchannel.

15. The apparatus of claim **11**, wherein the signal processor is further configured to compute a distance between the subchannel of interest and each of its neighbor subchannels on opposite sides of the subchannel of interest.

16. The apparatus of claim **11**, wherein the signal processor is further configured to send to an optical transmitter that transmits the plurality of subchannels of optical signals a message that includes information about the distance between the subchannel of interest and the at least one neighbor subchannel.

17. The apparatus of claim **11**, wherein the signal processor is further configured to send a message that includes information about the distance between the subchannel of interest and the at least one neighbor subchannel to a control plane

that generates tuning values, if needed, and sends the tuning values to an optical transmitter that transmits the plurality of subchannels of optical signals.

18. One or more non-transitory computer readable storage media encoded with software comprising computer executable instructions and when the software is executed operable to:

transform digital complex valued data derived from a received optical field comprising a plurality of subchannels of optical signals at respect wavelengths, to the frequency domain to produce electrical spectrum data; and

compute a distance between a subchannel of interest among the plurality of subchannels and at least one neighbor subchannel based on the electrical spectrum data by measuring a distance between points in the electrical spectrum data that are on opposite sides of a minimum point and which are at a predetermined power level, and adding a correction term to the measured distance to determine a distance between a center of the subchannel of interest and a center of the neighbor subchannel.

19. The non-transitory computer readable storage media of claim **18**, further comprising instructions operable to determine an amount of tuning for the subchannel of interest based on a target spacing between the subchannel of interest and the neighbor subchannel minus a distance between a center of the subchannel of interest and a center of the neighbor subchannel.

20. The non-transitory computer readable storage media of claim **18**, wherein the instructions operable to compute comprise instructions operable to compute a distance between the subchannel of interest and each of its neighbor subchannels on opposite sides of the subchannel of interest.

21. The non-transitory computer readable storage media of claim **18**, further comprising instructions operable to send to an optical transmitter that transmits the plurality of subchannels of optical signals a message that includes information about the distance between the subchannel of interest and the at least one neighbor subchannel.

22. A system comprising:

a first node and a second node each coupled to optical fibers to send and receive optical signals in a plurality of subchannels at respective wavelengths over the optical fibers to each other;

wherein each of the first and second nodes is configured, with respect to the plurality of subchannels of optical signals received from the other node, to:

convert a received optical field containing the plurality of subchannels to digital complex valued data;

transform the digital complex valued data to the frequency domain to produce electrical spectrum data; and

compute a distance between a subchannel of interest among the plurality of subchannels and at least one neighbor subchannel based on the electrical spectrum data;

wherein the second node is configured to determine a wavelength of one of the plurality of subchannels received from the first node and adjust a laser at the second node used to transmit to the first node based on the wavelength determined for the subchannel at the second node, and

wherein each of the first and second nodes computes the distance by measuring a distance between points in the electrical spectrum data that are on opposite sides of a minimum point and which are at a predetermined power level, and adding a correction term to the measured distance to determine a distance between a center of the subchannel of interest and a center of the neighbor subchannel.

23. The method of claim **1**, further comprising sending to an optical transmitter that transmits the plurality of subchannels of optical signals a message that includes information about the distance between the subchannel of interest and the at least one neighbor subchannel.

24. The method of claim **1**, wherein receiving, converting, transforming and computing are performed at a first node coupled to the optical fiber based on the optical field transmitted by a second node that is coupled to the optical fiber, and further comprising adjusting a wavelength of a laser at the first node based on the distance relative to a particular one of the plurality of subchannels.

25. The method of claim **24**, further comprising at the second node, determining a wavelength of one of the plurality of subchannels received from the first node, and adjusting a laser at the second node used to transmit to the first node based on the wavelength determined for the subchannel at the second node.

26. The apparatus of claim **11**, wherein the signal processor is further configured to send to an optical transmitter that transmits the plurality of subchannels of optical signals a message that includes information about the distance between the subchannel of interest and the at least one neighbor subchannel.

27. The apparatus of claim **11**, wherein the signal processor is further configured to send a message that includes information about the distance between the subchannel of interest and the at least one neighbor subchannel to a control plane that generates tuning values, if needed, and sends the tuning values to an optical transmitter that transmits the plurality of subchannels of optical signals.

28. The non-transitory computer readable storage media of claim **18**, wherein the instructions operable to compute comprise instructions operable to measure the distance between the center of the subchannel of interest and the peak associated with the edge of the neighbor subchannel and a correction term to the measured distance to determine the distance between the center of the subchannel of interest and the center of the neighbor subchannel.

29. The non-transitory computer readable storage media of claim **18**, further comprising instructions operable to determine an amount of tuning for the subchannel of interest based on a target spacing between the subchannel of interest and the neighbor subchannel minus a distance between a center of the subchannel of interest and a center of the neighbor subchannel.

30. The system of claim **22**, wherein each of the first and second nodes computes the distance by measuring the distance between center of the subchannel of interest and the peak associated with the edge of the neighbor subchannel and adding a correction term to the measured distance to determine the distance between the center of the subchannel of interest and the center of the neighbor subchannel.

31. The system of claim **22**, wherein the first and second nodes determine an amount of tuning for the subchannel of interest based on a target spacing between the subchannel of interest and the neighbor subchannel minus the distance between the center of the subchannel of interest and the center of the neighbor subchannel.

* * * * *